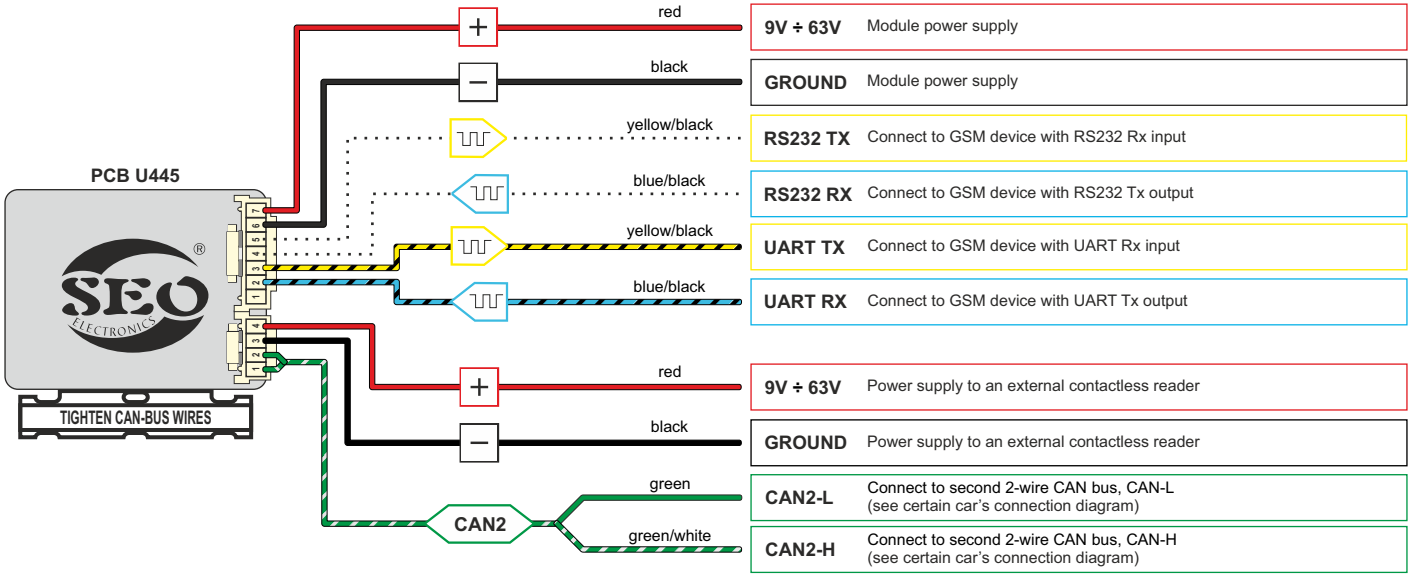

Brand and type: **SEO CANeasy**	Version: **33xxxxxx**	year: **18** →	rev03