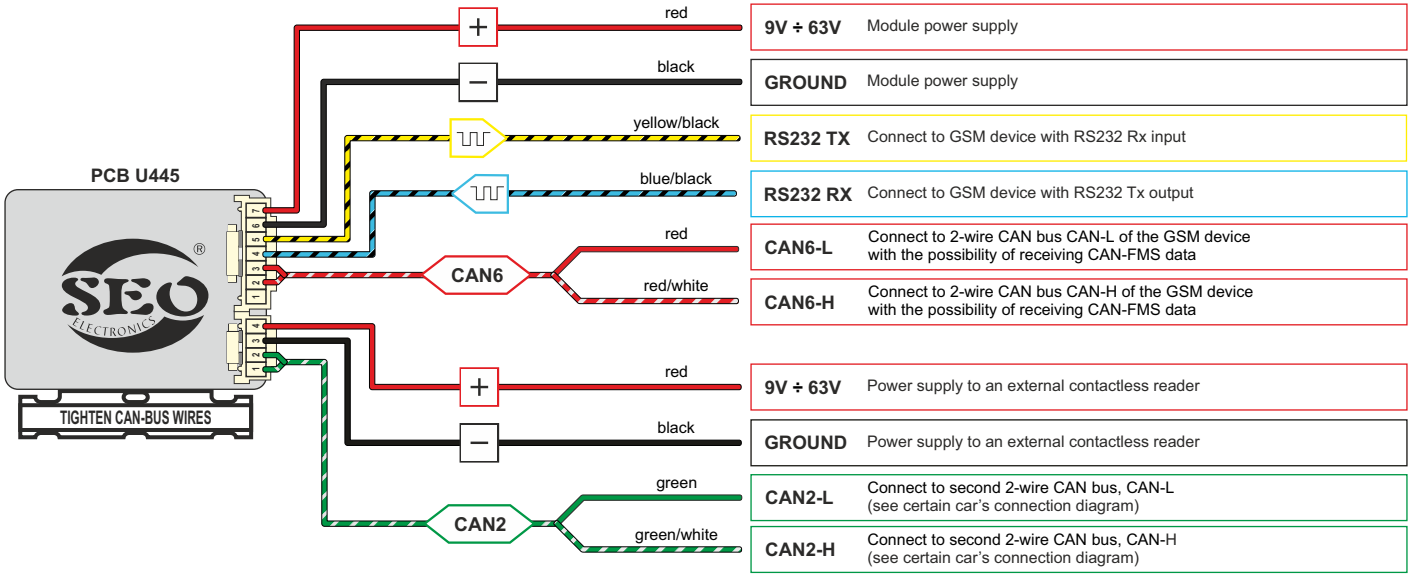

Brand and type: **SEO CANeasy FMS**	Version: **35xxxxxx**	year: **18** →	rev03