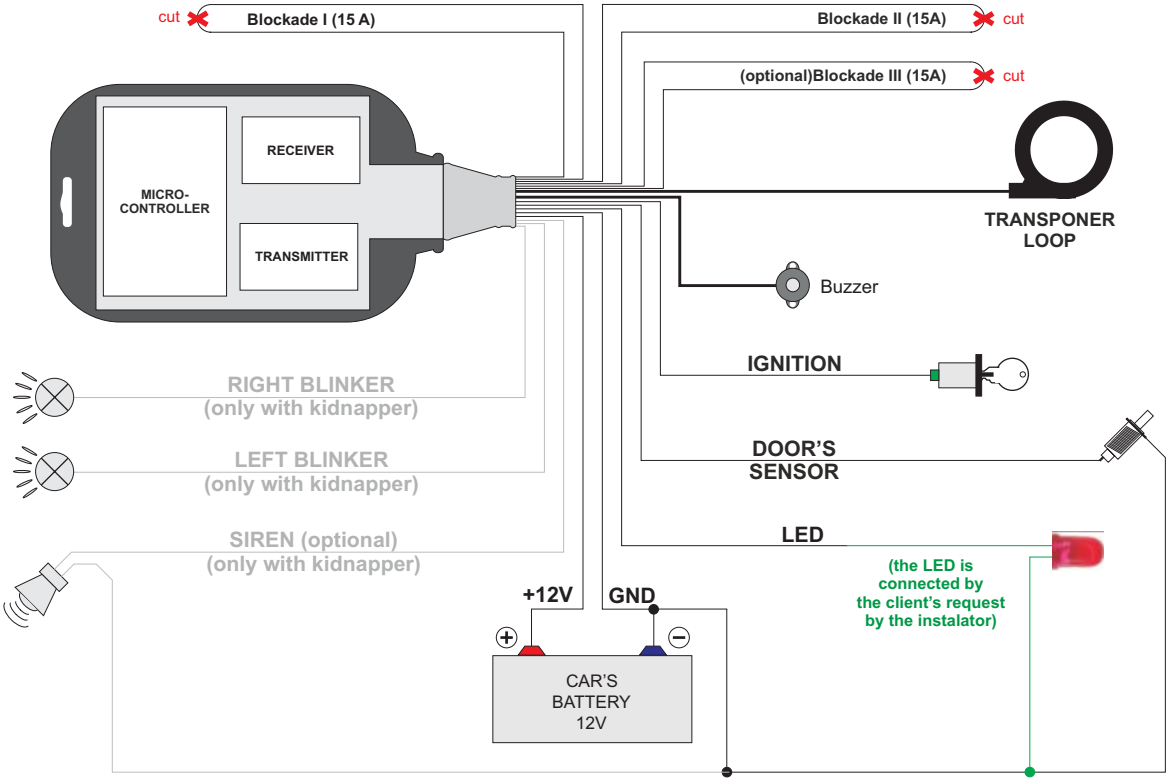


| brand: | Immobilizer SEO | model: | SYMPHONY | year: 04→ | rev00 |
|---|---|---|---|---|---|

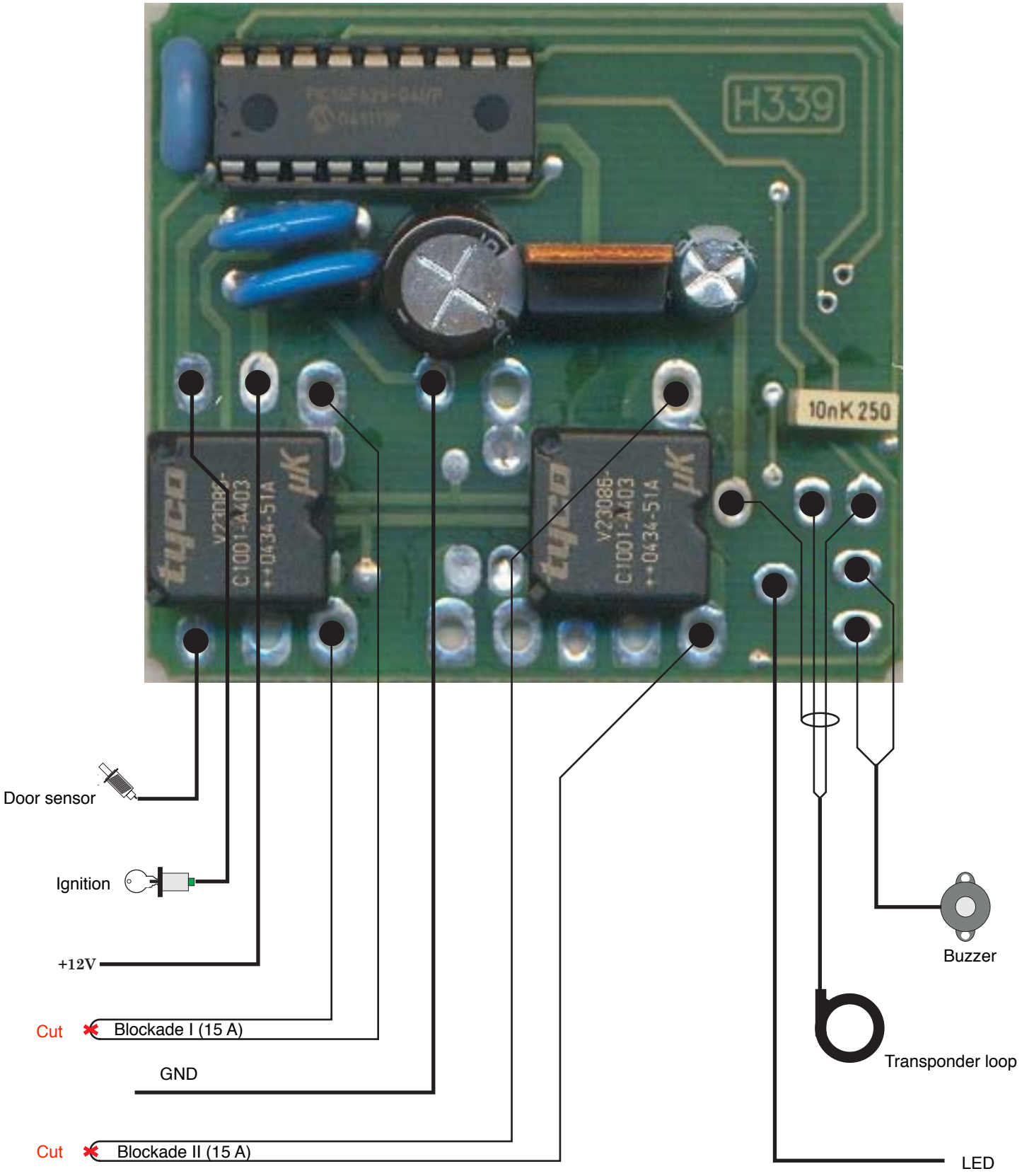
H339
10nK 250
Door sensor
Ignition
+12V
Cut
Blockade I (15 A)
GND
Cut
Blockade II (15 A)
Buzzer
Transponder loop
LED