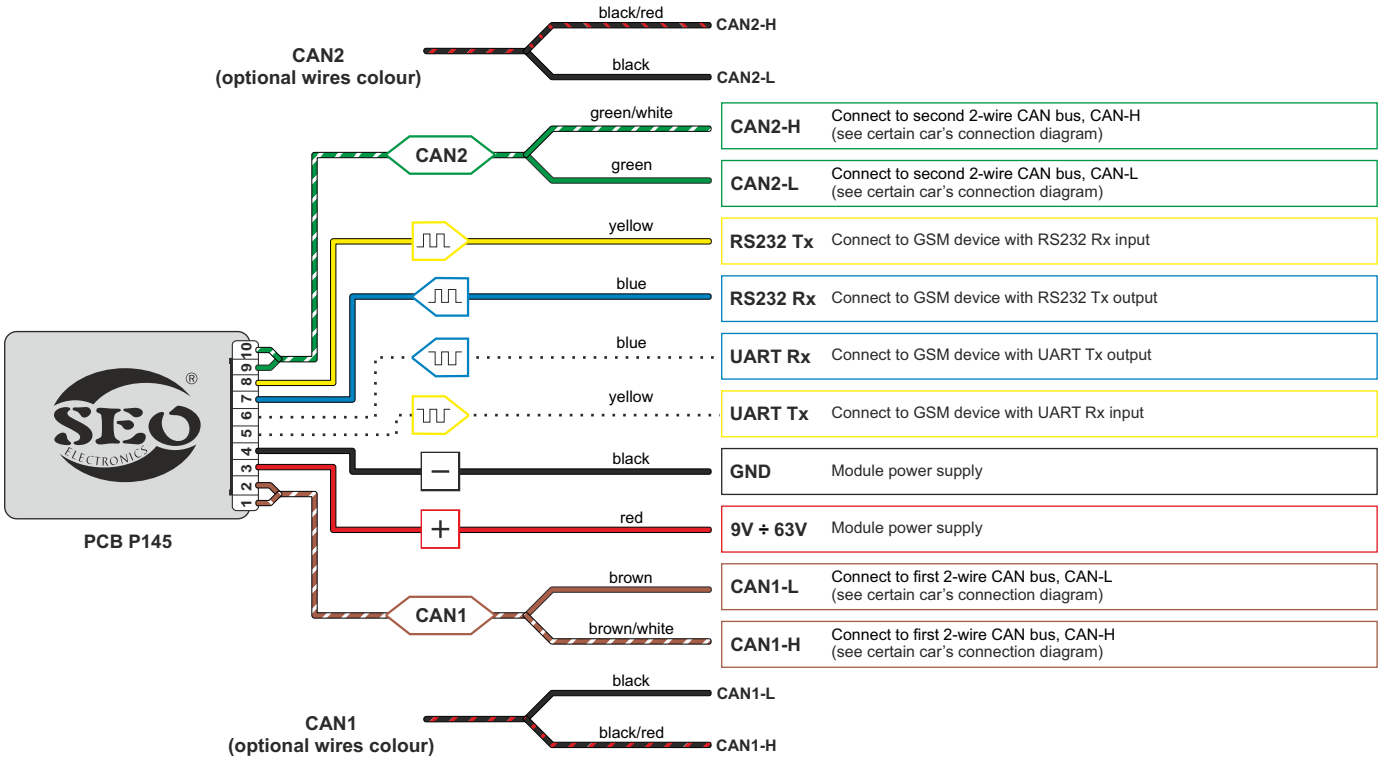

Brand and type: **SEO CANlog**	Version: **12xxxxxx**	year: **13** →	rev03